FUJITSU

# MAF3364FC SERIES
# MAG3182FC, MAG3091FC SERIES

# DISK DRIVES

# FIBRE CHANNEL INTERFACE

# MAINTENANCE MANUAL

C141-F037-02EN

## REVISION RECORD

| Edition | Date published | Revised contents |
|---|---|---|
| 01 | July, 1999 | |
| 02 | March, 2000 | |
| | | |

Specification No.: C141-F037-**EN

The contents of this manual is subject to change without prior notice.

All Rights Reserved.
Copyright © 2000 FUJITSU LIMITED

**This page is intentionally left blank.**

# FOR SAFE OPERATION

## Handling of This manual

This manual contains important information for using this product.  Read thoroughly before using the product.  Use this product only after thoroughly reading and understanding especially the section “Important Alert Items” in this manual.  Keep this manual handy, and keep it carefully.

FUJITSU makes every effort to prevent users and bystanders from being injured or from suffering damage to their property.  Use the product according to this manual.

### Functional Limitations

There may be certain functional limitations concerning the specifications and functions of the products covered by this manual depending on the equipment version, especially concerning the following functions.

Versions in which there functions can be used will be communicated through “ENGINEERING CHANGE REQUEST/NOTICE”, issued by Fujitsu.

| Function | Equipment Version Which Supports These Functions | | |
|---|---|---|---|
| | Equipment Version No. | EPROM Version No. | Standard INQUIRY Data Product Revision (ASCII) |
| READ RAM Command<br>WRITE RAM Command | These commands cannot be used in the current version. | | |

(Proceed to the Copyright Page)

**Related Standards**

Specifications and functions of products covered by this manual comply with the following standards.

| Standard (Text) No. | Name | Enacting Organization |
|---|---|---|
| NCITS TR-9 | FIBRE CHANNEL PRIVATE LOOP SCSI DIRECT ATTACH (FC-PLDA) | American National Standards Institute (ANSI) |
| ANSI X3.230-1994 | FIBRE CHANNEL PHYSICAL AND SIGNALING INTERFACE (FC-PH) | American National Standards Institute (ANSI) |
| ANSI X3.297-1996 | FIBRE CHANNEL PHYSICAL AND SIGNALING INTERFACE-2 (FC-PH-2) | American National Standards Institute (ANSI) |
| ANSI X3.272-199X | FIBRE CHANNEL ARBITRATED LOOP (FC-AL) | American National Standards Institute (ANSI) |
| ANSI X3.269-199X | FIBRE CHANNEL PROTOCOL FOR SCSI (SCSI-FCP) | American National Standards Institute (ANSI) |

All Right Reserved, Copyright © 2000 Fujitsu, Limited

# PREFACE

This manual explains concerning the MAF3364FC, MAG3182FC and MAG3091FC (hereafter, MAG series) series of 3.5 inch hard disk drives with built-in SCSI controller.

This manual gives detailed explanations of device configuration, fault analysis, parts replacement, operation check, adjustment, and hardware operation principles for the disk drives.

This manual is for engineers who have used fixed-type magnetic disk drives and are familiar with the operation environment of magnetic disk drives in user systems.

For the organization of manuals related to these disk drives and the scope of descriptions in this manual, see the "Manual system" described later. A full understanding on the contents of all volumes of the OEM manuals is assumed. (The OEM manuals have volumes covering product specification and installation procedure, interface specifications, and command processing functions and command specifications).

This manual is organized as follows:

This manual consists of the 5 chapters shown below, a Glossary and a list of Abbreviations.

**CHAPTER 1 SPECIFICATIONS AND EQUIPMENT CONFIGURATION**

This chapter explains concerning the basic specifications, the basic configuration, interface connector, setting switches and setting plug of the MAF3364FC and MAG series disk drives.

**CHAPTER 2 MAINTENANCE AND DIAGNOSIS**

This chapter describes the basic requirements for maintenance of the MAF3364FC and MAG series disk drives. This chapter also describes diagnostic methods for operation check and the basics of troubleshooting the disk drives.

**CHAPTER 3 FAULT ANALYSIS**

This chapter describes how to collect fault analysis information and how to analyze the collected information.

**CHAPTER 4 REMOVING AND REPLACING PARTS**

This chapter describes how to remove and replace parts that can be replaced in the field.

**CHAPTER 5 OPERATION PRINCIPLES**

This chapter describes the hardware configuration and operation of the MAF3364FC and MAG series disk drives.

**GLOSSARY**

**ABBREVIATIONS**

**CONVENTIONS**

This manual uses the following conventions for alerts to prevent physical or property damages to users or by standards.

**⚠DANGER**

⚠ DANGER indicates that personal injury *will* occur if the user does not perform the procedure correctly.

**⚠WARNING**

⚠ WARNING indicates that personal injury *could* occur if the user does not perform the procedure correctly.

**⚠CAUTION**

⚠ CAUTION indicates that either minor or moderate personal injury *may* occur if the user does not perform the procedure correctly.

**NOTICE**

NOTICE indicates that inconvenience to the user such as damages to the product, equipment, data, and/or other property may occur if the user does not pay attention or perform the procedure correctly.

**IMPORTANT**

IMPORTANT indicates information that the helps the user use the product more effectively.

Indicates

This manual indicates;

Decimal number: Indicates as it is.

Hexadecimal number: Indicates as X'17B9', 17B9h, or 17B9H

Binary number: Indicates as "010"

**DISCLAIMER**

Failure of the MAF3364FC and MAG series intelligent disk drive is defined as a failure requiring adjustments, repairs, or replacement. Fujitsu is not responsible for drive failures caused by misuse by the user, poor environmental conditions, power trouble, host problems, cable failures, or any failure not caused by the drive itself.

The suffix of the model name of the disk drive varies depending on the two device types and storage capacity (Note 1). However, in this manual, the typical model names (Note 2) are used unless otherwise noted. These disk drives may be called intelligent disk drives (IDD), drives, or devices in this manual.

**Note 1:** Model names

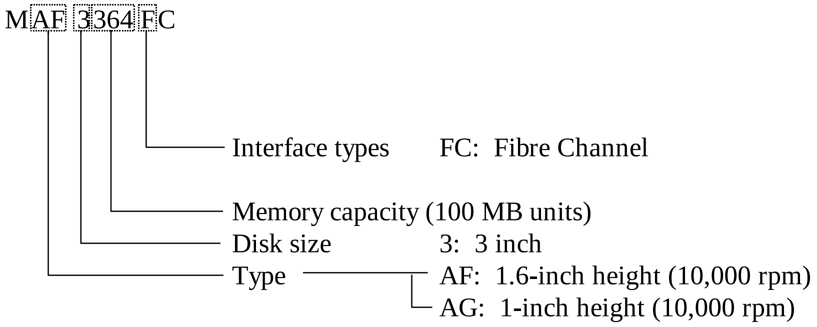


**Note 2:** Type model name

| Type model name | Model name |
|---|---|
| MAF3364 | MAF3364FC |
| MAG3182 | MAG3182FC |
| MAG3091 | MAG3091FC |

**This page is intentionally left blank.**

# Cautions Regarding Safety

## List of Items with Serious Warnings

Serious warnings included in this manual are as follows.

**⚠CAUTION** Indicates items for which, if the product is not used correctly, there is danger not only of minor or mildly severe injury, but also danger of the product itself being damaged or of other users and their property being injured or damaged.

| Work Category | Warning Item | Page |
|---|---|---|
| During Storage | Injury | |
| | 1. To avoid shocks, turn off the power before mounting or removing a PCA. | 2-1 |
| | 2. To avoid injury, do not touch the mechanical assembly during disk drive operation. | |
| | 3. Do not use solvents to clean the disk drive. | |
| | Injury | |
| | To prevent injury to workers, note the cautions listed in Subsection 2.1.1. | 4-3 |
| During Assembly, Maintenance | Damage to the Equipment | |
| | 1. To discharge static electricity from the human body, touch the frame (grounding) before touching a PCA. This prevents the PCA from being damaged by static electricity. | 2-2 |
| | 2. To prevent electrical damage to the disk drive, turn the power off before mounting or removing a PCA or connecting or disconnecting a cable, connector, or plug. | |
| | 3. Do not turn the power on while removing a PCA. This operation is required to prevent unexpected or unpredictable operation. | |
| | 4. Do not use a conductive cleaner to clean a disk drive assembly. | |
| | 5. Open all ventilation holes to prevent overheating of electric circuits. | |

| Work Category | Warning Item | Page |
|---|---|---|
| | Equipment Damage | |
| | • Do not open the DE in the field because it is completely sealed. | 2-2 |
| | • Never open the disk enclosure in the field. Opening the disk enclosure in the field may cause an irreparable fault. | 2-11 |
| | Destruction of Data | |
| | Save data stored on the disk drive before requesting repair. Fujitsu does not assume responsibility if data is destroyed during servicing or repair. | 2-4 |
| | Equipment Damage | |
| | 1. To prevent damage to the disk drive, note the cautions listed in Section 2.1.1. | 4-3 |
| | 2. Turn off the system power completely before removing the disk drive. Do not remove cables or disk drive mounting screws while the power is on. | |
| | 3. Do not move or remove the disk drive until disk drive operation stops completely. The waiting time before moving or removing the drive is about 30 seconds after the spindle motor is stopped by a START/STOP UNIT command, or 30 seconds after the power is turned off. | |

# Manual Orgainization

| | |
|---|---|
| FIBRE<br>CHANNEL<br>PRODUCT<br>MANUAL | • General Description<br>• Specifications<br>• Data Format<br>• Installation Requirements<br>• Installation<br>• Diagnostics and Maintenance |
| FIBRE<br>CHANNEL<br>INTEFACE<br>SPECIFICATIONS | • Fibre Channel Interface<br>• Command Processing<br>• Data Buffer Management<br>• Command Specification<br>• Sense Data and Error Recovery Procedure<br>• Disk Medium Management |
| FIBRE<br>CHANNEL<br>INTEFACE<br>MAINTENANCE<br>MANUAL<br><br><This manual> | • Specifications and Equipment Configuration<br>• Maintenance and Diagnostic<br>• Error Analysis<br>• Removal and Replacement Procedures<br>• Principle of Operation |

**This page is intentionally left blank.**

# CONTENTS

page

**CHAPTER 1 SPECIFICATIONS AND EQUIPMENT CONFIGURATION** ......................1 - 1

1.1 Product Specifications ........................................................................................1 - 1

1.2 Installation Conditions ........................................................................................1 - 1

1.3 Power Supply Conditions ....................................................................................1 - 1

1.4 Connection Conditions ........................................................................................1 - 2

1.5 Settings ................................................................................................................1 - 2

**CHAPTER 2 MAINTENANCE AND DIAGNOSIS** ..............................................2 - 1

2.1 Maintenance Conditions.......................................................................................2 - 1

2.1.1 Precautions ........................................................................................................2 - 1

2.1.2 Maintenance requirements .................................................................................2 - 2

2.1.3 Maintenance levels.............................................................................................2 - 4

2.1.4 Revision numbers...............................................................................................2 - 5

2.1.5 Tools and test equipment....................................................................................2 - 6

2.1.6 Self-diagnostic functions ....................................................................................2 - 6

2.1.7 Tests ...................................................................................................................2 - 6

2.2 Operation Check ...................................................................................................2 - 8

2.2.1 Initial seek operation check ................................................................................2 - 8

2.2.2 Operation test......................................................................................................2 - 8

2.2.3 Diagnostic test ....................................................................................................2 - 8

2.3 Troubleshooting Procedures ..................................................................................2 - 9

2.3.1 Outline of troubleshooting procedures ................................................................2 - 9

2.3.2 Troubleshooting with disk drive replacement in the field.....................................2 - 9

2.3.3 Troubleshooting at the repair site .......................................................................2 - 10

2.3.4 Troubleshooting with parts replacement in the factory.........................................2 - 11

2.3.5 Finding possibly faulty parts...............................................................................2 - 11

**CHAPTER 3 ERROR ANALYSIS**...........................................................................3 - 1

3.1 Error Analysis Information Collection...................................................................3 - 1

3.1.1 Sense data ...........................................................................................................3 - 1

3.1.2 Sense key, sense code, and subsense code ..........................................................3 - 1

3.2 Sense Data Analysis..............................................................................................3 - 3

3.2.1 Error information indicated with sense data ....................................................................3 - 3
3.2.2 Sense data (4-03-xx), (4-40-xx), (4-44-xx), and (4-C4-xx) ..............................................3 - 4
3.2.3 Sense data (1-1x-xx), (3-1x-xx), and (E-1D-00): Disk read error....................................3 - 4
3.2.4 Sense data (5-2x-xx), (5-3D-00), (5-90-00), (B-47-xx), (B-49-00), and (B-4E-00): fibre channel interface error ..........................................................................3 - 4

**CHAPTER 4 REMOVAL AND REPLACEMENT PROCEDURES**...................................4 - 1
4.1 Spare Parts.......................................................................................................................4 - 1
4.2 Disk Drive Removal.........................................................................................................4 - 3

**CHAPTER 5 PRINCIPLE OF OPERATION**.......................................................................5 - 1
5.1 Outline.............................................................................................................................5 - 1
5.2 Disk Drive Configuration ..................................................................................................5 - 1
5.2.1 Disks.................................................................................................................................5 - 2
5.2.2 Heads ...............................................................................................................................5 - 2
5.2.3 Spindle mechanism ...........................................................................................................5 - 3
5.2.4 Actuator ............................................................................................................................5 - 3
5.2.5 Air filters ..........................................................................................................................5 - 3
5.3 Circuit Configuration ........................................................................................................5 - 3
5.4 Power-On Sequence .........................................................................................................5 - 6
5.5 Factory-Calibration ...........................................................................................................5 - 7
5.6 Read/Write Circuit ............................................................................................................5 - 7
5.6.1 Head IC.............................................................................................................................5 - 7
5.6.2 Write circuit.......................................................................................................................5 - 9
5.6.3 Read circuit........................................................................................................................5 - 9
5.6.4 Write frequency change circuit..........................................................................................5 - 10
5.7 Servo Control...................................................................................................................5 - 12
5.7.1 Servo control circuit...........................................................................................................5 - 12
5.7.2 Servo format .....................................................................................................................5 - 13
5.7.3 Data-side servo data format...............................................................................................5 - 15
5.7.4 Spindle motor control.........................................................................................................5 - 15
5.7.5 Voice coil motor control.....................................................................................................5 - 16

**GLOSSARY** ..........................................................................................................................GL - 1

**ABBREVIATIONS**...............................................................................................................AB - 1

# FIGURES

page
2.1 Revision label....2 - 5
2.2 Indicating revision numbers....2 - 6
2.3 Test flowchart....2 - 7
3.1 Format of extended sense data....3 - 2
5.1 Head configuration....5 - 2
5.2 Circuit configuration....5 - 5
5.3 IDD operation sequence at power-on....5 - 6
5.4 Block diagram of read-write circuit....5 - 8
5.5 Block diagram of servo control circuit....5 - 12
5.6 Position of servo track....5 - 14
5.7 Servo frame....5 - 15

# TABLES

page

2.1 System-level field troubleshooting....................2 - 10

2.2 Disk drive troubleshooting....................2 - 11

3.1 Definition of sense data....................3 - 3

4.1 List of Model Names/Product Numbers....................4 - 2

5.1 Algorithm for write precompensation....................5 - 9

5.2 MAF3364FC write frequency and recording density in each zone....................5 - 11

5.3 MAG series write frequency and recording density in each zone....................5 - 11

# CHAPTER 1 SPECIFICATIONS AND EQUIPMENT CONFIGURATION


**1.1 Product Specifications**

**1.2 Installation Conditions**

**1.3 Power Supply Conditions**

**1.4 Connection Conditions**

**1.5 Settings**


This chapter describes concerning the specifications and configuration of the intelligent disk drive. The MAF3364FC and MAG series intelligent disk drives (IDD) are high performance, large capacity 3.5 inch fixed magnetic disk drives with a built-in fibre channel controller. The interface used to connect the MAF3364FC and MAG series intelligent disk drives with the host system is compatible with the SCSI standard. It complies with the fibre channel PLDA standard “NCITS TR-19 FIBRE CHANNEL PRIVATE LOOP SCSI DIRECT ATTACH (FC-PLDA)” which includes all from the fibre channel physical hierarchy to the SCSI command protocol.

Details of the contents included in this chapter are included in the Product Manual, so please refer to these items in the Product Manual corresponding to each item.

## 1.1 Product Specifications

Concerning the “Model and Product Number”, “Basic Specifications”, “Environmental Specifications,” “Error Rate,” and “Reliability,” please refer to 2.1, “Hardware Specifications” in the Product Manual (C141-E078EN).

## 1.2 Installation Conditions

Concerning the “External Dimensions,” “Installation Direction,” and “Cautions during Installation,” please refer to 4.1, “Mounting Requirements” in the Product Manual (C141-E078EN).

## 1.3 Power Supply Conditions

Concerning this item, please refer to 4.2, “Power Supply Requirements” in the Product Manual (C141-E078EN).

## 1.4 Connection Conditions

Concerning “Connectors for Connections,”, please refer to 4.3, “Connection Requirements” in the Product Manual (C141-E078EN).

## 1.5 Settings

Concerning the “MAF3364FC Series Setting Terminal” and “MAG3xxxFC Series Setting Terminal”, and “Setting Parameters,” please refer to 5.2, “Setting” and 5.4 “Confirming Operations after Installation and Preparation for use” in the Product Manual (C141-E078EN).

# CHAPTER 2 MAINTENANCE AND DIAGNOSIS


| |
|---|
| 2.1 Maintenance Conditions |
| 2.2 Operation Check |
| 2.3 Troubleshooting Procedures |


This chapter explains disk drive maintenance, diagnosis, operation check, and troubleshooting. This chapter covers the following:

- Cautions during ordinary maintenance and troubleshooting
- Indication of maintenance levels (field and factory)
- Indication of device revision, and revision updating in the field
- Tools and test equipment required at each maintenance level
- General test method at each maintenance level
- Recommended troubleshooting procedures, and detection of possibly faulty parts

## 2.1 Maintenance Conditions

### 2.1.1 Precautions

Take the following precautions to prevent injury during maintenance and troubleshooting:

**⚠CAUTION**

*Injury*

1. *To avoid shocks, turn off the power before mounting or removing a PCA.*
2. *To avoid injury, do not touch the mechanical assembly during disk drive operation.*
3. *Do not use solvents to clean the disk drive.*

Take the following precautions to prevent disk drive damage during maintenance and troubleshooting:

**⚠CAUTION**

*Damage to the Equipment*

1. *To discharge static electricity from the human body, touch the frame (grounding) before touching a PCA. This prevents the PCA from being damaged by static electricity.*

2. *To prevent electrical damage to the disk drive, turn the power off before mounting or removing a PCA or connecting or disconnecting a cable, connector, or plug.*

3. *Do not turn the power on while removing a PCA. This operation is required to prevent unexpected or unpredictable operation.*

4. *Do not use a conductive cleaner to clean a disk drive assembly.*

5. *Open all ventilation holes to prevent overheating of electric circuits.*

### 2.1.2 Maintenance requirements

(1) Preventive maintenance

Preventive maintenance such as replacing air filters is not required.

**⚠CAUTION**

*Do not open the DE in the field because it is completely sealed.*

(2) Service life

The service life under suitable conditions and treatment is as follows. The service life is depending on the environment temperature. Therefore, the user must design the system cabinet so that the average DE surface temperature is as possible as low.

- DE surface temperature: 45°C or less — 5 years
- DE surface temperature: 46°C to 50°C — 4 years
- DE surface temperature: 51°C to 55°C — 3 years
- DE surface temperature: 56°C and more — Strengthen cooling power so that DE surface temperature is 55°C or less.
  For MAF3364FC model, the heating value generated by the IDD itself is higher, so that cooling care is specially required.

Reference value: An air flow with a wind velocity of more than 0.5m/s is required in an environment at 40°C, and an air flow with a wind velocity of more than 1.0m/s in an environment at 45°C, (Center of DE cover ≤ 55°C)

Even if the IDD is used intermittently, the longest service life is 5 years.

**Note:**

The "average DE surface temperature" means the average temperature at the DE surface throughout the year when the IDD is operating.

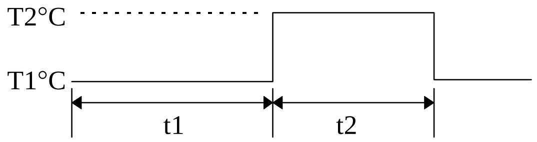


$$\text{Average DE surface temperature} = \frac{T1 \times t1 + T2 \times t2}{t1 + t2}$$

(3) Parts that can be replaced in the field

The PCA cannot be replaced in the field. The DE cannot be replaced in the field.

(4) Service system and repairs

Fujitsu has the service system and repair facility for the disk drive. Contact Fujitsu representative to submit information for replacing or repairing the disk drive. Generally, the following information must be included:

a) IDD model, part number (P/N), revision number, serial number (S/N), and date of manufacturing

b) Error status

- Date when the error occurred
- System configuration
- Environmental conditions (temperature, humidity, and voltage)

c) Error history

d) Error contents

- Outline of inconvenience
- Issued commands and specified parameters
- Sense data
- Other error analysis information

**⚠CAUTION**

> *Destruction of Data*
> *Save data stored on the disk drive before requesting repair. Fujitsu does not assume responsibility if data is destroyed during servicing or repair.*

See Section 5.1 for notes on packing and handling when returning the disk drive.

For notes on packaging and handling when returning a disk drive, refer to the Product Manual.

### 2.1.3 Maintenance levels

If a disk drive is faulty, replace the whole disk drive since repair requires special tools and environment. This section explains the two maintenance levels.

(1) Field maintenance (disk drive replacement)

- This replacement is done at the user's site.
- Replacement uses standard tools.
- Replacement is usually done by the user, retail dealer, distributor, or OEM engineer.

(2) Factory maintenance (parts replacement)

- This replacement can only be done by Fujitsu.
- Replacement includes maintenance training and OEM engineer support. OEM engineers usually support retail dealers and distributors.
- Replacement uses factory tools and test equipment. Recommended spare units and parts may be used for repair or replacement.

### 2.1.4 Revision numbers

The revision number of the disk drive is represented with a letter and a number indicated on the revision label attached to the DE. Figure 2.1 shows the revision label format.

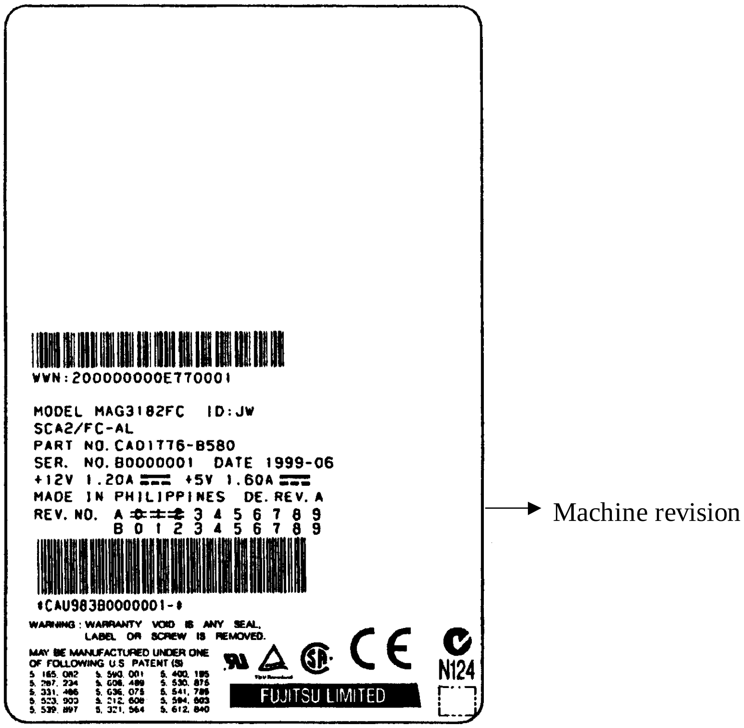


**Figure 2.1 Revision label**

(1) Indicating revision number at factory shipment

When the disk drive is shipped from the factory, the revision number is indicated by deleting numbers in the corresponding letter line up to the corresponding number with = (see Figure 2.2).

(2) Changing revision number in the field

To change the revision number because parts are replaced or other modification is applied in the field, the new level is indicated by enclosing the corresponding number in the corresponding letter line with circle (see Figure 2.2).

**IMPORTANT**

*When the revision number is changed after the drive is shipped from the factory, Fujitsu issues "Engineering Change Request/Notice" in which the new revision number is indicated. When the user changes the revision number, the user should update the revision label as described in item (2) after applying the modification.*

At shipment

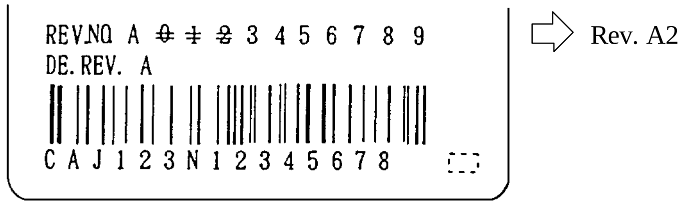


Revising at field

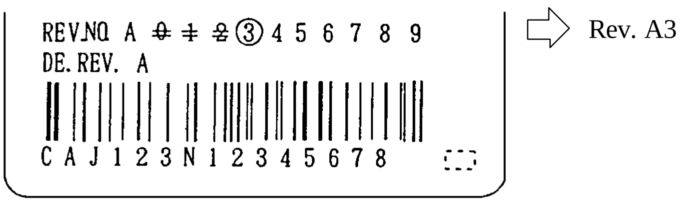


**Figure 2.2 Indicating revision numbers**

### 2.1.5 Tools and test equipment

Disk drive troubleshooting and repair in the field require only standard hand tools. No special tools or test equipment are required.

This manual does not describe the factory-level tools and test equipment.

### 2.1.6 Self-diagnostic functions

IDD has the following self-diagnostic functions for checking basic operation of a single IDD:

- Initial self-diagnosis
- Offline self-diagnosis (using Send Diagnostic command)

For details of these self-diagnostic functions, refer to the Product Manual.

### 2.1.7 Tests

This disk drive can be tested in the following ways:

- Initial seek operation check  (See Subsection 2.2.1)
- Operation test  (See Subsection 2.2.2)
- Diagnostic test  (See Subsection 2.2.3)

Figure 2.3 shows the flow of these tests.

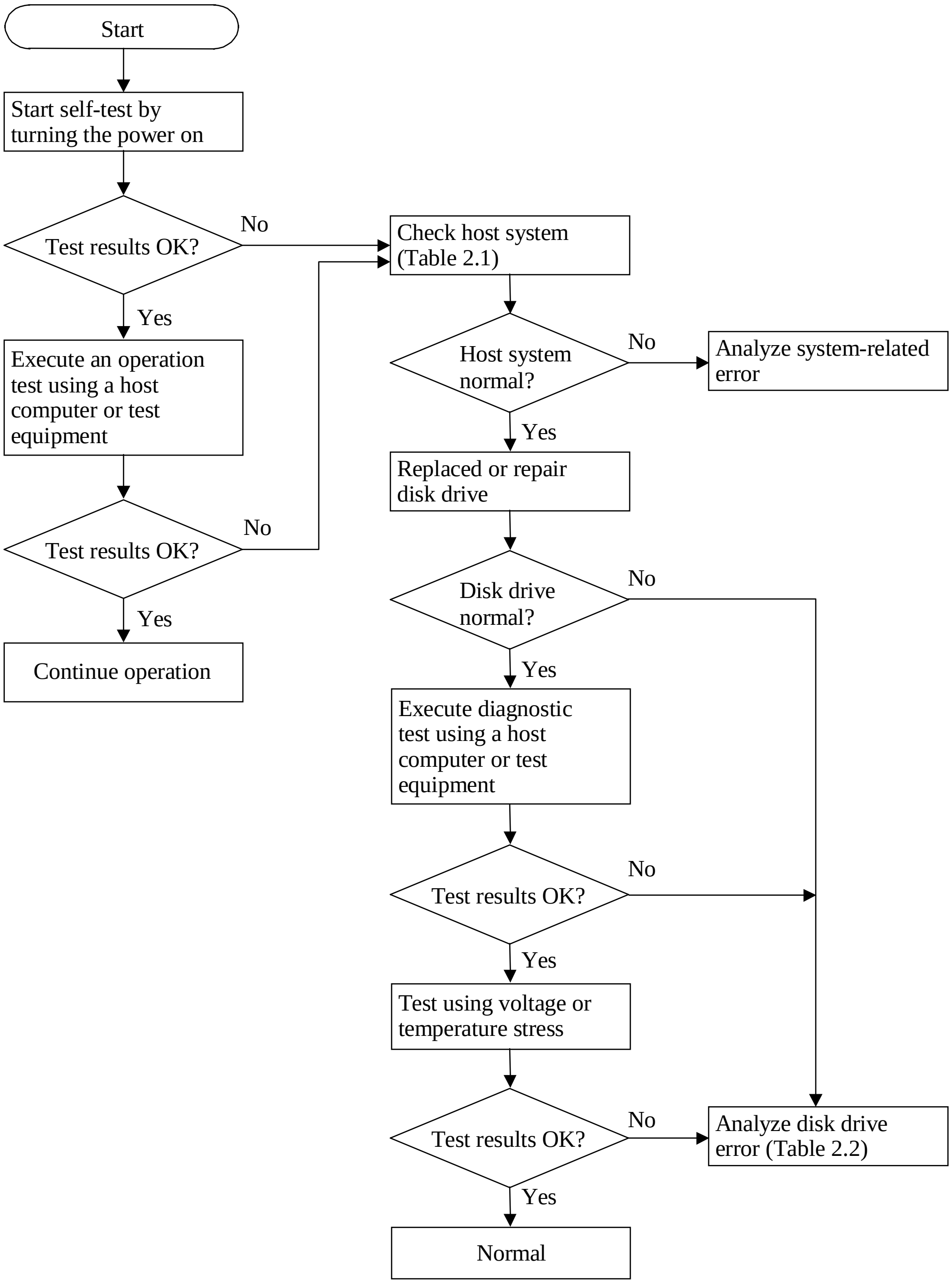


**Figure 2.3     Test flowchart**

## 2.2 Operation Check

### 2.2.1 Initial seek operation check

If an error is detected during initialization by the initial seek operation check routine at turning on the Fault LED. The spindle motor of the disk drive then stops, and the disk drive is unusable.

For an explanation of the operation check before the initial seek, refer to the Product Manual.

### 2.2.2 Operation test

While the host computer is processing data, the IDD monitors disk drive operation including data processing, command processing, and seek operations. If the IDD detects an error, the IDD posts the error to the INIT. The INIT then posts the error to the user.

The user may detect an intermittent or nonfatal error such as abnormal noise, abnormal odor, or very slow operation.

An error posted in an operation test must be investigated. Replace the disk drive to see whether the error was caused by the disk drive.

Often, errors posted in an operation test may be caused by the host system. Possible causes include insufficient power capacity, loose cable connection, insufficient timing or insufficient mechanical play, and problems related to other systems.

If an operation error is detected by the error detection circuit of the disk drive, an interrupt occurs. The interrupt is posted to the MCU on the PCA. The MCU stops the currently processed command, and causes the CHECK CONDITION status to post the error to the INIT.

When receiving the CHECK CONDITION status, the INIT issues a REQUEST SENSE command to collect detailed information about the error. The INIT then issues a REZERO UNIT command to return the read/write head to track 00. In normal processing, the IDD itself or INIT determines how to handle the error (processing retry or stop).

To analyze the error posted in the operation test, reconstruct the conditions in which the error occurred. Then, start troubleshooting the whole host system by replacing the disk drive.

### 2.2.3 Diagnostic test

The diagnostic test is executed to find a faulty subassembly in a faulty disk drive, or to check disk drive performance. This test is usually a combination of specific disk drive functions or group of functions. This test may be executed using a different host computers or test equipment and away from the environment where the error first occurred.

To analyze the error posted in the diagnostic test, reconstruct the conditions in which the error occurred. Then, look for a possibly faulty subassembly or part of the disk drive.

The procedures to be used in this test depend largely on the type of test equipment used, and are not covered by this manual.

## 2.3 Troubleshooting Procedures

### 2.3.1 Outline of troubleshooting procedures

This section explains the troubleshooting procedures for disk drive errors.

Depending on the maintenance level, analyze the error to detect a possibly faulty part (disk drive, recommended spare part, or disk drive part).

Full-scale troubleshooting is usually required if the error cause is not known. If the error cause is clear (e.g., abnormal noise in disk enclosure or burning of a PCA), troubleshooting is straightforward.

### 2.3.2 Troubleshooting with disk drive replacement in the field

At this level of maintenance, we recommend replacing the disk drive as a unit. If replacing the disk drive rectifies the fault, return the removed disk drive to the factory, for test and repair. If the newly installed disk drive does not rectify the fault another part of the system is faulty.

Table 2.1 summarizes system-level field troubleshooting. Troubleshooting must be done in the field, to find faulty part (disk drive or system).

**Table 2.1 System-level field troubleshooting**

| Item | Recommended work |
|---|---|
| AC and DC power level | Check that the DC voltage is within the specified range (±5%).<br><br>Check that the +5 VDC value (pin of the interface connector) is 4.75 to 5.25 VDC.<br><br>Check that the +12 VDC supply (pin of the interface connector of disk drive) is 11.4 to 12.6 VDC. |
| Electrical noise | Make sure the maximum ripple peak-to-peak value of +5 VDC is within 250 mV and +12 VDC is within 250 mV. |
| Drive selection address | Check that the disk drive selection address is set correctly. |
| System cables | Check that all system cables are connected correctly. |
| System diagnostic test | When possible, execute the system level diagnostic routine as explained in the host computer manual. This gives a detailed report of a possible fault. |
| Intermittent or nonfatal errors | Check the AC voltage from the power supply. Check the DC voltage level at the power connector for the disk drive.<br><br>If the AC voltage level is abnormal or there is a lot of electrical noise, notify the user of the error.<br><br>If the DC voltage level is unstable, replace the power supply unit.<br><br>If possible, replace the disk drive. If replacing the disk drive does not eliminate the error, the removed disk drive is probably not faulty. To continue error analysis, refer to the hardware and software manuals supplied with the system. |

### 2.3.3 Troubleshooting at the repair site

For maintenance at this level, we recommend additional testing of the disk drive and signal checking.

The sense data posted from the IDD helps with troubleshooting. This sense data makes the error type clear (functional, mechanical, or electrical error). Chapter 3 error analysis by sense data, and gives supplementary information on finding the error cause (faulty part).

Table 2.2 lists how to detect a faulty disk drive subassembly. This fault finding requires a working host computer or disk drive test equipment to recreate the error conditions.

If the detected error cannot be recreated in an ordinary test, disk drive conditions can be changed to force the error to recur. This is done by changing the DC voltage or the ambient temperature of the disk drive.

If the error does not recur with changed conditions, the disk drive is not faulty. If no error occurs in the disk drive test, notify the user of the test results, and find out from the user the environment conditions where the disk drive is used.

**Table 2.2 Disk drive troubleshooting**

| Item | Recommended action |
|---|---|
| Frequent or repeated seek errors | Collect sense data, and see Chapter 3.<br><br>Replace the disk drive, and check that the test method is correct. If the error recurs, it is likely that the disk drive is normal but the test method is incorrect. |
| Intermittent or nonfatal errors | Replace the disk drive, and check that the test method is correct. If the error recurs, it is likely that the disk drive is normal but the test method is incorrect.<br><br>To check performance, change the disk drive conditions by changing the voltage or temperature. |

If the disk drive error recurs or a possibly faulty part is found by troubleshooting, return the complete disk drive to the factory for repair. A media defect list must be included with a disk drive returned to the factory.

If the possibly faulty part is the disk enclosure, return the whole disk drive to the factory for repair. Also if a clear error (erroneous servo track information or noisy drive) is detected in the disk enclosure, return the whole disk drive to the factory. A media defect list must be included with a disk drive returned to the factory.

**⚠CAUTION**

*Equipment Damage*
*Never open the disk enclosure in the field. Opening the disk enclosure in the field may cause an irreparable fault.*

### 2.3.4 Troubleshooting with parts replacement in the factory

This manual does not cover troubleshooting at the factory level.

### 2.3.5 Finding possibly faulty parts

Finding possibly faulty parts in the field was explained in Subsection 2.3.2. This manual does not cover finding possibly faulty parts at the factory level.

**This page is intentionally left blank.**

# CHAPTER 3 ERROR ANALYSIS


3.1 Error Analysis Information Collection

3.2 Sense Data Analysis


This chapter explains in detail how sense data collected from a disk drive is used for troubleshooting. Sense data reflects an error in the disk drive, and helps with troubleshooting.

A sense key, sense code, and subsense code, taken from various sense data are repeated. Also in this chapter, troubleshooting is performed using these three codes. Unless otherwise specified, "sense data" means the above three codes. When sense data is represented as (x-xx-xx), the leftmost x is a sense key, the middle xx is a sense code, and the rightmost x is a subsense code.

## 3.1 Error Analysis Information Collection

### 3.1.1 Sense data

When IDD posts a CHECK CONDITION status or detects a fatal error in the SCSI bus, the current command or queued command is cleared. In such a case, the IDD generates sense data about the command-issuing INIT. The INIT can read the sense data by issuing a REQUEST SENSE command.

Even if a transfer byte length that is shorter than the sense data length of the tested device is specified, the command terminates normally. In this case, however, the INIT receives part of the sense data, but the remaining part of the sense data is lost.

For details of the REQUEST SENSE command, refer to the SCSI Logical Interface Specifications.

### 3.1.2 Sense key, sense code, and subsense code

If an error is detected in a disk drive, the error status is indicated in the sense data collected from the disk drive. Figure 3.1 shows the positions of a sense key, sense code, and subsense code.

| | Byte | Bit 7 | 6 | 5 | 4 | 3 | 2 | 1 | 0 |
|---|---|---|---|---|---|---|---|---|---|
| Basic information | Byte 0 | Valid | X‘70’ or X‘71’ (error code) | | | | | | |
| | 1 | X‘00’ | | | | | | | |
| | 2 | 0 | 0 | ILI | 0 | Sense key | | | |
| | 3 | [MSB] Information | | | | | | | |
| | 4 | | | | | | | | |
| | 5 | | | | | | | | |
| | 6 | | | | | | | | [LSB] |
| | 7 | X‘28’ (additional sense data length) | | | | | | | |
| | 8 | [MSB] Command-specific information | | | | | | | |
| | 9 | | | | | | | | |
| | 10 | | | | | | | | |
| | 11 | | | | | | | | [LSB] |
| | 12 | Sense code | | | | | | | |
| | 13 | Subsense code | | | | | | | |
| | 14 | X‘00’ | | | | | | | |
| | 15 | SKSV | Sense key-specific information | | | | | | |
| | 16 | | | | | | | | |
| | 17 | | | | | | | | |
| Additional information | 18 | X | 0 | 0 | 0 | SCSI ID | | | |
| | 19 | CDB operation code | | | | | | | |
| | 20 | Detail information | | | | | | | |
| | | | | | | | | | |
| | 47 | | | | | | | | |

MSB: Most Significant Byte
LSB: Least Significant Byte
LUN: Logical Unit Number
SKSV: Sense Key Specific Valid
SCSI ID: SCSI Identifier

**Figure 3.1 Format of extended sense data**

## 3.2 Sense Data Analysis

### 3.2.1 Error information indicated with sense data

Subsection 3.2.2 onwards explain troubleshooting using sense data.

Table 3.1 lists the definition of sense data. For details of sense data, refer to the Fibre Channel Logical Interface Specifications.

**Table 3.1 Definition of sense data**

| Sense data | | | Definition |
|---|---|---|---|
| Sense key | Sense Code | Sub Sense Code | |
| 00 | 00 | 00 | Operation was normal. |
| 4 | 03<br>32<br>40<br>44<br>C4 | xx<br>01<br>xx<br>xx<br>xx | A write to a disk terminated abnormally.<br>Failed to update the defect list due to a disk medium write error, etc.<br>An error occurred in power-on self-diagnosis.<br>A hardware error occurred inside IDD.<br>A drive error occurred. |
| 1<br>3 | 1x<br>1x | xx<br>xx | A disk read error occurred.<br>A disk read error occurred. |
| E | 1D | 00 | Data discrepancy found by VERIFY command byte check. |
| 5<br><br><br><br><br>B<br>B<br>B | 2x<br>3D<br>90<br><br><br>47<br>49<br>4E | xx<br>00<br>00<br><br><br>00<br>00<br>00 | An SCSI error, such as an invalid operation code, occurred.<br>The Reserve bit of the IDENTIFY message was set to 1.<br>The RESERVE UNIT, RELEASE UNIT, or PRIORITY RESERVE command cannot be executed because the SCSI ID of the INIT was not posted in the SELECTION phase.<br><br><br>FC parity error<br>An unmounted or inappropriate message was received.<br>An overlap command was issued. |

### 3.2.2 Sense data (4-03-xx), (4-40-xx), (4-44-xx), and (4-C4-xx)

Sense data (4-03-xx), (4-40-xx), (4-44-xx), and (4-C4-xx) indicate one of the following:

- A target sector could not be detected using the sector counter.
- A seek process overran the specified time.
- A write to a disk terminated abnormally.
- An error occurred in power-on self-diagnosis.
- A hardware error occurred inside IDD.
- A drive error occurred.

The symptoms above are generally caused by an error in a PCA or DE.

For details of the sense data above, refer to the Fibre Channel Logical Interface Specifications.

### 3.2.3 Sense data (1-1x-xx), (3-1x-xx) and (E-1D-00): Disk read error

If sense data (1-1x-xx), (3-1x-xx) or (E-1D-00) occurs frequently in a specific block of a disk, there is disk damage that was not recorded in the media defect list. In this case, assign an alternate block to the error-detected block using a REASSIGN BLOCKS command. For an explanation of the REASSIGN BLOCKS command, refer to the Fibre Channel Logical Interface Specifications.

If this error occurs in different blocks, a PCA or DE is faulty.

For details of the above sense data, refer to the Fibre Channel Logical Interface Specifications.

### 3.2.4 Sense data (5-2x-xx), (5-3D-00), (5-90-00), (B-47-xx), (B-49-00) and (B-4E-00): fibre channel interface error

Sense data (5-2x-xx), (5-3D-00), (5-90-00), (B-47-xx), (B-49-00), (B-4D-xx) and (B-4E-00) indicates one of the following symptoms:

- An invalid or unsupported command was issued, or invalid or unsupported parameters were specified.
- A fibre channel interface error occurred.

If this error occurs, a PCA or the fibre channel interface is faulty.

For details of the above sense data, refer to the SCSI Logical Interface Specifications.

# CHAPTER 4 REMOVAL AND REPLACEMENT PROCEDURES

4.1 Spare Parts
4.2 Disk Drive Removal

This chapter explains how to remove and replace a disk drive. It is assumed that the reader already has a through understanding of the replacement of the whole disk drive.

Note the following when removing and replacing a disk drive:

- A disk drive must be removed from the host system.
- The section numbers in parentheses refer to the previous section.
- Install a new disk drive by reversing the removal procedure.

For effective maintenance, abide by the following guidelines:

- Removed screws and parts must be placed in a place or container where they will not be lost or damaged.
- All maintenance work must be recorded.
- Screws must be tightened, but not overtightened.
- To discharge static electricity from the human body, touch the frame (grounding) or wear the grounding band before touching PCA.

## 4.1 Spare Parts

No spare parts are available. For the model (type name) and parts number (PN) for ordering a new disk drive, refer to Table 4.1.

**Table 4.1 List of Model Names/Product Numbers**

| Model Name (Model Name) | Total Memory Capacity (512 Byte Format Capacity) | Product Number | Remark |
|---|---|---|---|
| MAF3364FC | 36.4 GB | CA01776-B980 | 1.6-inch height 10,025 rpm, 10 media disks, 19 heads |
| MAG3182FC | 18.2 GB | CA01776-B580 | 1-inch height 10,025 rpm, 5 media disks, 10 heads |
| MAG3091FC | 9.1 GB | CA01776-B380 | 1-inch height 10,025 rpm, 3 media disks, 5 heads |

Factory Setting Format: 512 Format
Format Capacity: 1 GB = $10^9$ Bytes
Mounting Screws: #6-32 UNC

## 4.2 Disk Drive Removal

Since the method and procedure for dismounting the disk drive for replacement of the drive, etc. depends on the locker structure of the system, etc., the work procedure must be determined in consideration of the requirements specific to the system. This section describes the general procedure and notes on dismounting the drive.

1) Disconnect the power cable.

2) Disconnect the SCSI cable.

3) When the external operating panel is installed, disconnect the cable connected to it. If access to the connector is difficult, it can be disconnected after Step 5).

4) Take out the screws used to fasten the drive, then take the drive out of the system locker.

5) When the drive is to be stored or transported, place it in an anti-static bag, then pack it carefully.

**⚠CAUTION**

*Injury*

1. *To prevent injury to workers, note the cautions listed in Subsection 2.1.1.*

**⚠CAUTION**

*Equipment Damage*

1. *To prevent damage to the disk drive, note the cautions listed in Section 2.1.1.*

2. *Turn off the system power completely before removing the disk drive. Do not remove cables or disk drive mounting screws while the power is on.*

3. *Do not move or remove the disk drive until disk drive operation stops completely. The waiting time before moving or removing the drive is about 30 seconds after the spindle motor is stopped by a START/STOP UNIT command, or 30 seconds after the power is turned off.*

**This page is intentionally left blank.**

# CHAPTER 5 PRINCIPLE OF OPERATION


**5.1 Outline**

**5.2 Disk Drive Configuration**

**5.3 Circuit Configuration**

**5.4 Power-On Sequence**

**5.5 Factory-Calibration**

**5.6 Read/Write Circuit**

**5.7 Servo Control**


This chapter explains the general design concepts of the disk drive. It also explains the main parts, sequences, servo control method, and the main electrical circuits of the drive at the block level.

## 5.1 Outline

The principle of operation of this disk drive can be divided into two parts. The first part explains the mechanical parts of the drive (see Section 5.2). The second part explains the servo data recorded on a magnetic disk and explains drive control (see Sections 5.3 to 5.7).

## 5.2 Disk Drive Configuration

The main disk drive subassemblies are a disk enclosure (DE) and printed-circuit boards (also called printed circuit assemblies (PCA)).

The DE contains all the moving parts of the disk drive. That is, DE contains disks, heads, spindle mechanism, and actuator, and also air filters.

These parts are explained in Subsections 5.2.1 to 5.2.5.

Each PCA contains the electric circuit of the disk drive. See Section 5.3 for explanations of these electric circuits.

### 5.2.1 Disks

Each DE contains disks whose external diameter is 95 millimeters and internal diameter is 25 millimeters. The DE for the MAF3364FC, MAG3182FC and MAG3091FC contains 10, 5 and 3 disks respectively.

Each time disk rotation stops, the read-write heads touch the disk surfaces. Disk surfaces withstand at least 10,000 head touch operations at disk rotation start and stop.

### 5.2.2 Heads

The read/write head configuration is shown in Figure 5.1.

There are 19 read/write heads in the MAF3364FC, 10 in the MAG3182FC and 5 in the MAG3091FC.

These heads float up from the surface of the disk automatically when the spindle motor's speed has reached a certain speed.

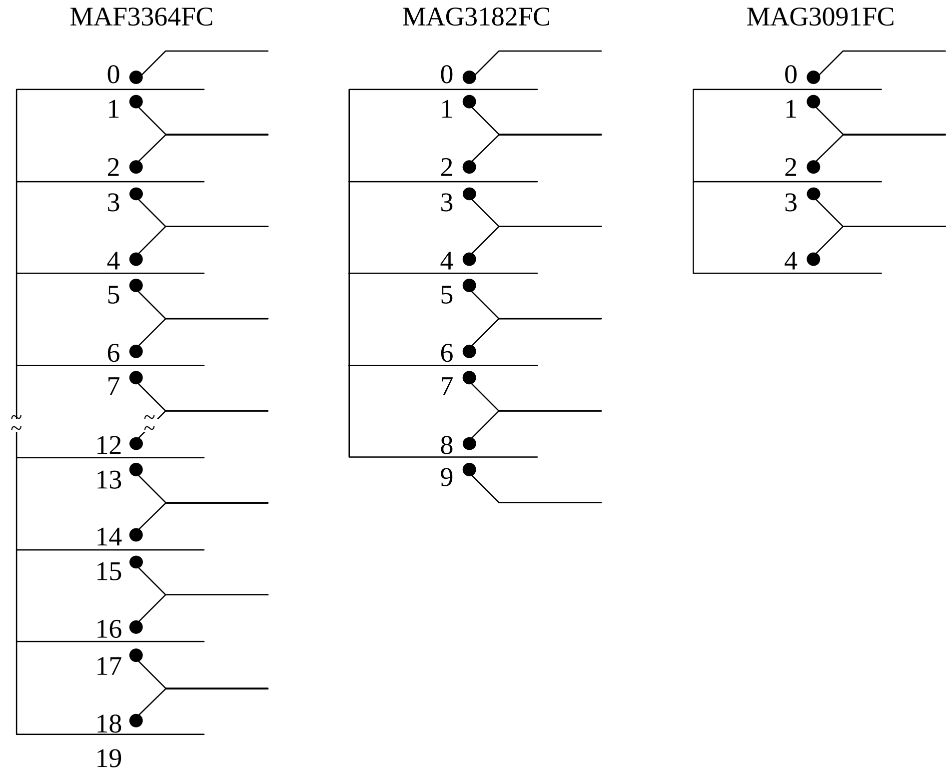


**Figure 5.1 Head configuration**

### 5.2.3 Spindle mechanism

The spindle mechanism consists of a disk stack assembly and a spindle motor. The disk stack assembly is directly driven by the direct drive type DC spindle motor. The rotational frequency of this spindle motor is 10,025 rpm. A counterelectromotive force is generated by the drive current in the spindle motor coil. A fixed rotational frequency of the spindle is maintained by comparing the frequency of the counterelectromotive voltage with the reference frequency generated by the crystal oscillator.

### 5.2.4 Actuator

The actuator consists of a voice coil motor (VCM) and a head carriage. The voice coil motor moves the head carriage to the inner or outer side of the disk. The head carriage position is controlled by feeding back servo information read by the heads.

### 5.2.5 Air filters

There are two filters in the disk drive, the breathing filter and the circulation filter. The breathing filter is used to conduct filtered air into and out of the DE. Starting or stopping the disk generates heat in the spindle motor in the DE, causing temperature variation in the DE. This temperature variation expands or compresses the air in the DE causing the filtered air to come in or go out of the DE. At times when the atmospheric air pressure changes, such as when the disk drive is shipped by airmail, filtered air enters the DE.

The circulation filter catches dust or dirt that may get inside the DE. Air is continuously circulating inside the drive and passing through the circulation filter, utilizing a closed loop air circulation system that uses the blower effect of the rotating disks.

## 5.3 Circuit Configuration

Figure 5.2 shows the circuit configuration of IDD.

(1) Read/write circuit

The read/write circuit uses LSI devices and a head IC to improve data reliability and prevent external noise from causing errors.

The read/write circuit also contains a VFO circuit and an 16/17 RLL code modem circuit.

The read/write circuit also contains a synthesizer for the constant density recording method.

(2) Servo circuit

Voice coil motor position/speed control is carried out by a closed loop servo system and carries out feedback control based on servo information recorded on the data surface. Analog servo data is converted into a digital signal, and is then processed by a DSP. The digital signal is then converted into an analog signal which then controls the voice coil motor.

The DSP accurately controls traffic positioning of each head using servo information on the data surface.

(3) Spindle motor drive circuit

The spindle motor drive circuit drives the spindle motor. A drive current in the motor coil generates a counter emf. The frequency of the counter emf is compared, by the DSP, with a reference frequency derived by dividing the crystal oscillator frequency. The DSP uses the result of the comparison to control the rotational frequency of the spindle motor.

(4) Controller circuit

The controller circuit has the following main functions:

- Fibre channel control
- Data buffering (4 MB, 1 to 32 segments)
- SCSI protocol control and data transfer control
- Sector format control
- ECC
- Error recovery and self-diagnosis

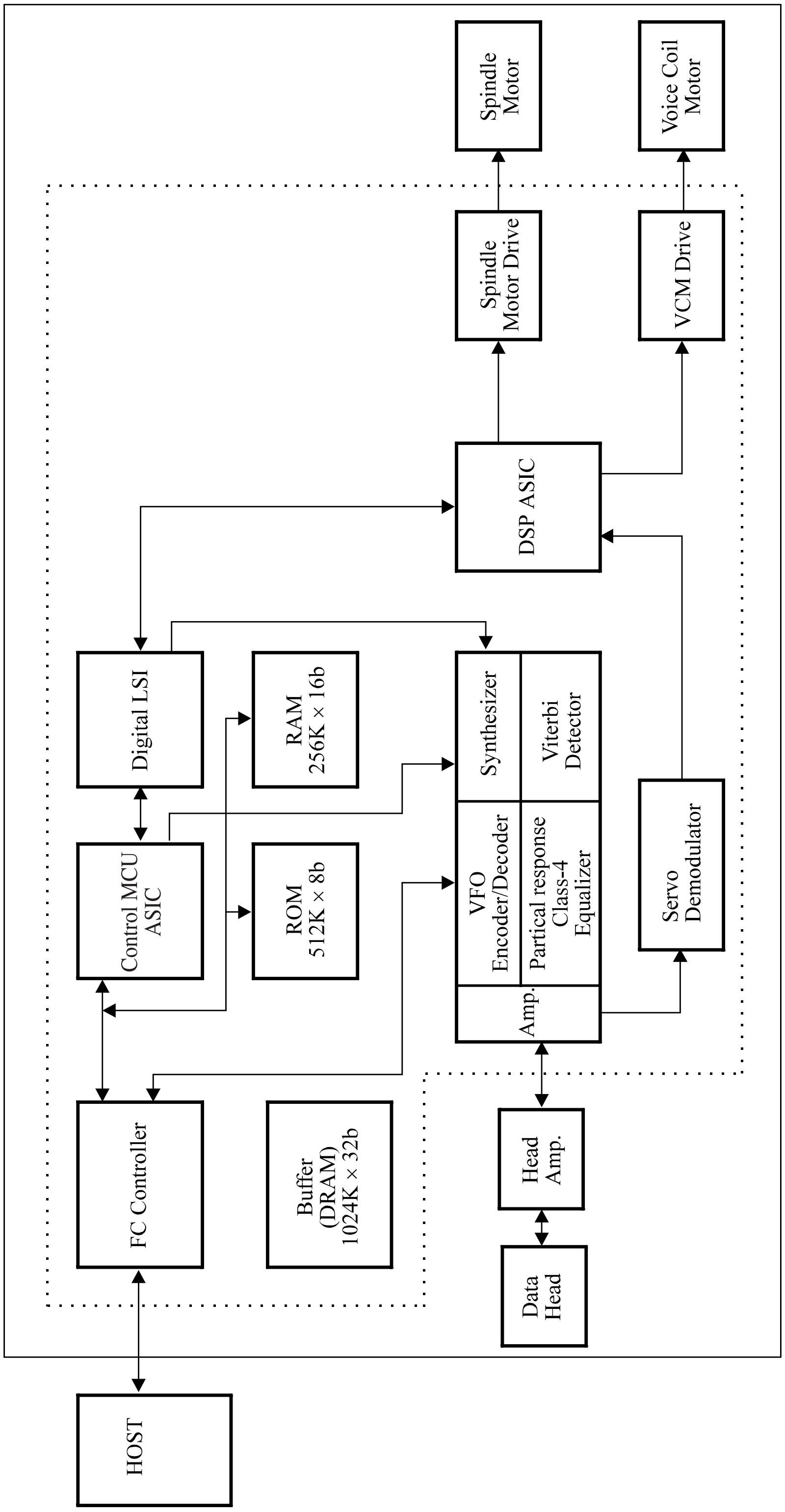


**Figure 5.2 Circuit configuration**

## 5.4 Power-On Sequence

Figure 5.3 shows the operation sequence of the IDD at power-on. The processes shown in this figure are explained below:

1) After the power is turned on, the IDD executes self-diagnosis 1 (MPU bus test, internal register write/read test, and work RAM write/read test).

2) When self-diagnosis 1 terminates successfully, the IDD activates the spindle motor when the motor start mode is set (SW1 is on; default setting at factory shipment).

3) The IDD executes self-diagnosis 2 (data buffer write/read test).

4) The IDD receives the START UNIT command, then the IDD activates the spindle motor when the motor start mode is set. When the motor start mode is not set, the IDD terminates this sequence and enters the command waiting state.

5) The IDD checks that the spindle motor rotation reaches a steady rotational speed.

6) The IDD executes self-configuration. This includes execution of the factory calibration which is described on the next page and the processing of reading the format information and defect position information written in the system zone.

7) The disk drive is in ready state and commands from the host system can be executed.

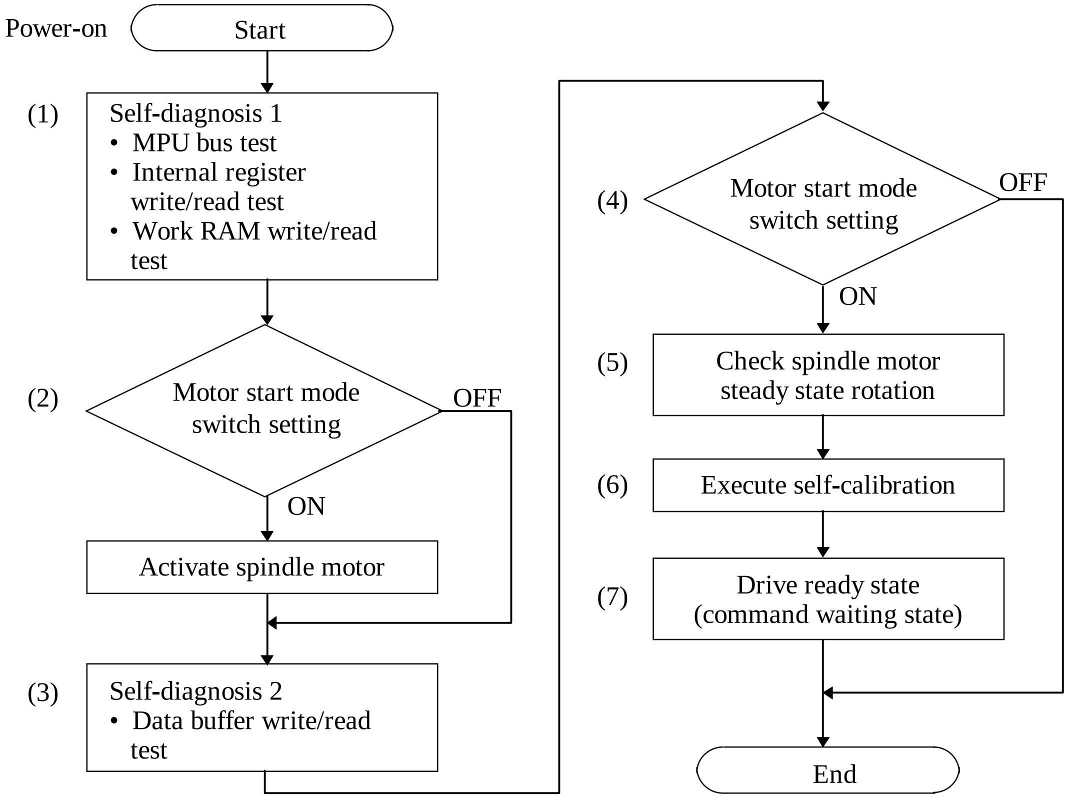


**Figure 5.3 IDD operation sequence at power-on**

## 5.5 Factory-Calibration

Factory calibration is intended to correct errors in the mechanisms and circuits and maintain stable seek, read or write operation.

(1) External force adjustment

Even if the actuator stops at a fixed position, disturbing forces such as an FPC force and air movement caused by disk rotation are exerted. Also, when an instruction that reduces the voice coil motor current to 0 is issued, a very small offset current flows in the control circuit. Such disturbing forces are collectively handled, as external forces, by the control circuit. The external forces depend on the disk type and actuator position. Self-calibration measures and records external forces on the 256 representative cylinders, from the outermost to innermost cylinder. To compensate for the effect of the external forces, the offset values that were measured in each actuator position are applied to the circuit. This provides stable seek operation.

(2) Servo gain adjustment

The servo control circuit gives stable operation when the gain of the servo loop is constant. However, servo loop gains vary slightly, depending on each device and cylinder position (outer, center, and inner cylinders) according to the characteristics of the magnet used in the VCM. To compensate, the servo gain is measured at representative positions, from the outermost to innermost, for each device. Measurement is similar to the external force adjustment. Measured values are stored, as a table, in flash memory. To adjust servo gain, the DSP refers to this table, and creates a control table for constant loop gain. The DSP stores this table in flash memory.

(3) Head position correction

When a write head is independent of the corresponding read head and both heads are driven by the rotary actuator, the heads have different center positions depending on the cylinder position. To compensate, the read head must be centered when writing. To adjust precisely, the offset value for each head of each drive must be measured and stored in flash memory. At correction, the DSP calculates the offset value for the head and cylinder position, and centers the read head when writing.

## 5.6 Read/Write Circuit

The write/read circuit consists of a head IC unit (in DE), write circuit, read circuit, and a write frequency adjust circuit. Figure 5.4 is a block diagram of the read/write circuit.

### 5.6.1 Head IC

The head IC is mounted inside the DE. The head IC has a preamplifier and a write current driver, and has a write error detection function. Each channel is connected to each data head, and is switched with a serial port. If a write error, such as a head short-circuit or head disconnection is detected, an error signal (WUS) is generated.

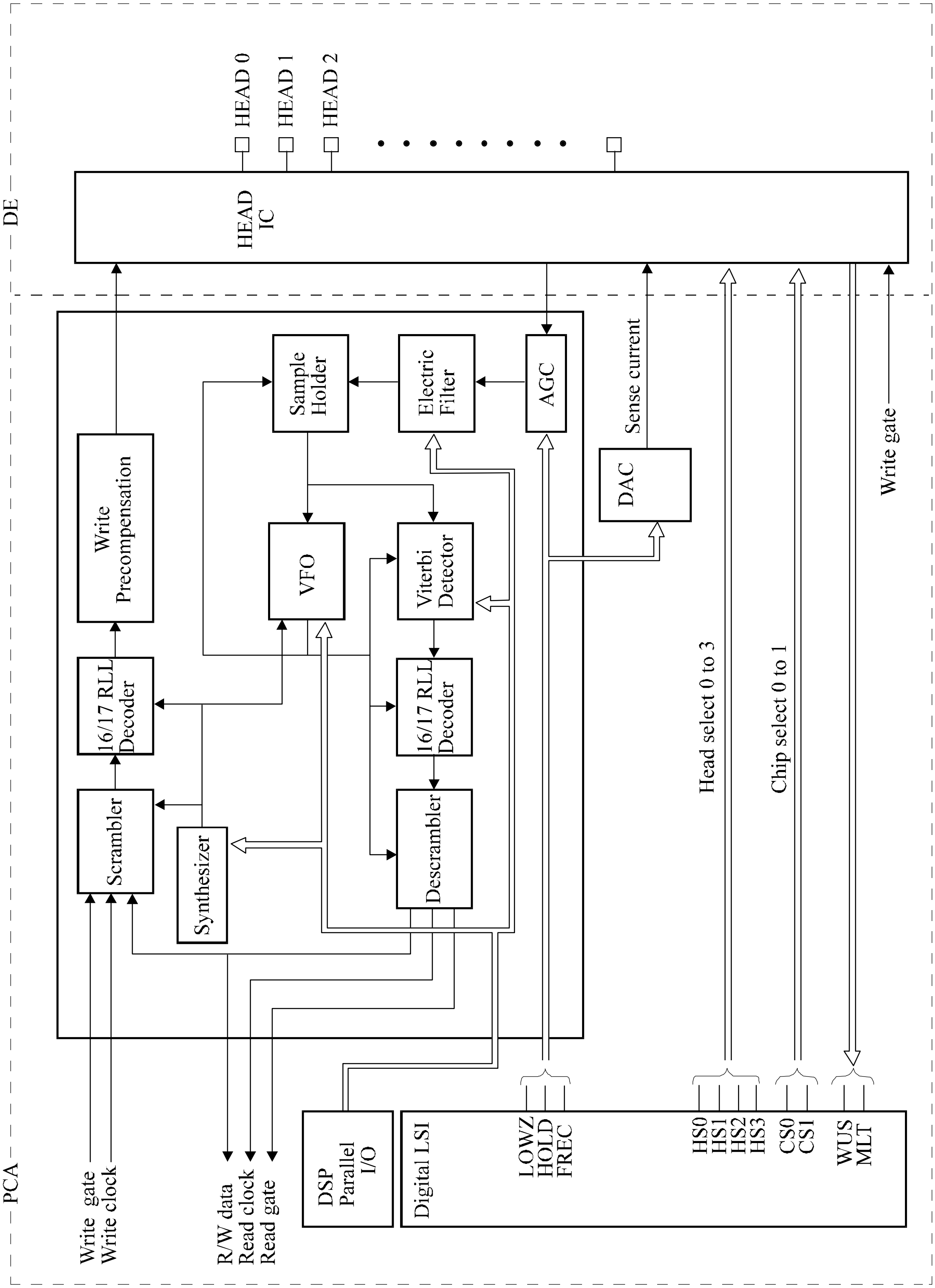


**Figure 5.4 Block diagram of read-write circuit**

### 5.6.2 Write circuit

The write data is converted into the NRZ data (WDT), and is sent, together with the Write clock (WCLK) signal, to the write circuit. The NRZ data is converted into 16/17 RLL code by the encoder circuit, and is written to the disk.

(1) 16/17 RLL encoder

This disk drive uses the 16/17 RLL recording method. The NRZ data sent from the SCSI controller is converted into pseudorandom data by the scrambler circuit. The 16/17 RLL encoder then converts 16-bit NRZ data into a 17-bit 16/17 RLL code.

(2) Write precompensation

Write precompensation is done at write, to correct for the frequency characteristics of the recording disk. Table 5.1 lists the algorithm for write precompensation.

**Table 5.1 Algorithm for write precompensation**

| Bit | Bit | Bit | Compensation |
|---|---|---|---|
| n-1 | n | n+1 | Bit n |
| 1 | 1 | 1 | Late |
| 1 | 1 | 0 | Late |
| 0 | 1 | 1 | None |
| 0 | 1 | 0 | None |

Late: Bit n is time shifted (delayed) from its nominal time position towards the bit n+1 time position

### 5.6.3 Read circuit

The data output from the head IC is converted to a fixed level. The acquired data is then sent to the sample and hold circuit through the electrical filter circuit. The sample and hold circuit samples data, then the viterbi detection circuit converts the data into a Logic signal (RD). The VFO circuit generates a clock signal synchronized with RD. Based on this clock signal and RD signal, the 16/17 decoding circuit converts data into NRZ data, and sends data to the buffer memory.

(1) AGC amplifier

The AGC amplifier automatically keeps the output amplitude level constant, even if the input amplitude level changes. Even if the head output level changes with head characteristics and outer or inner head position, the AGC amplifier output level is constant.

(2) Sample and hold circuit

The sample and hold circuit samples analog-waveform voltages according to the period of the clock signals generated by the VFO circuit. The sample signal from the sample and hold circuit is passed to the AGC gain controlling level detection circuit and VFO circuit.

(3) VFO circuit

The VFO circuit generates a clock signal that is synchronized with the sample and hold circuit output signal. At data write, the VFO circuit generates a clock signal that is synchronized with the clock signal from the synthesizer.

(4) Viterbi detection circuit

The viterbi detection circuit detects only the sample values above about 50% threshold level of the sample and hold circuit output signal. Then this circuit decodes the nearest digital data to actual data.

(5) 16/17 RLL decoding circuit

The 16/17 RLL decoding circuit decodes the viterbi detection circuit output signal. This decoding circuit reverse converts (scrambles) the pseudorandom pattern (created at write) into NRZ data. The NRZ data is then fed to the upper-level circuit.

(6) Sense current setup circuit

This disk drive uses MR heads, so the current applied to the heads is controlled by a digital-to-analog converter. The sense current is set in units of heads.

### 5.6.4 Write frequency change circuit

This disk drive uses the constant characteristics recording method for high density recording.

This recording method is different from the conventional recording method in which the write frequency is fixed. With this new recording method, cylinders are grouped into several zones depending on the drive type. The write frequency is changed so that the inner cylinder of each zone has the same recording characteristics. The data area is split into 14 concentric circular zones. Table 5.2 and 5.3 list the write frequency and recording density (bpi) of each zone.

**Table 5.2 MAF3364FC write frequency and recording density in each zone**

| Zone | 1 | 2 | 3 | 4 | 5 | 6 | 7 | 8 |
|---|---|---|---|---|---|---|---|---|
| Cylinder | 0 to 899 | 900 to 1,999 | 2,000 to 3,019 | 3,020 to 3,729 | 3,730 to 4,029 | 4,030 to 4,669 | 4,670 to 5,189 | 5,190 to 5,459 |
| 1F(MFRPS) | 47.5 | 47.5 | 47.5 | 46.2 | 45.6 | 44.3 | 43.3 | 42.8 |
| 2F(MFRPS) | 379.8 | 379.8 | 379.8 | 369.2 | 364.5 | 354.3 | 345.5 | 342.2 |
| bpi | 225,473 | 238,109 | 251,265 | 254,130 | 255,204 | 257,900 | 260,124 | 261,234 |

| Zone | 9 | 10 | 11 | 12 | 13 | 14 |
|---|---|---|---|---|---|---|
| Cylinder | 5,460 to 6,459 | 6,460 to 7,369 | 7,370 to 7,929 | 7,930 to 8,399 | 8,400 to 9,519 | 9,520 to 10,199 |
| 1F(MFRPS) | 40.7 | 38.8 | 37.6 | 36.5 | 33.9 | 32.2 |
| 2F(MFRPS) | 325.8 | 310.3 | 302.6 | 292.2 | 271.5 | 257.6 |
| bpi | 265,627 | 269,694 | 272,320 | 274,560 | 279,708 | 283,000 |

**Table 5.3 MAG series write frequency and recording density in each zone**

| Zone | 1 | 2 | 3 | 4 | 5 | 6 | 7 | 8 |
|---|---|---|---|---|---|---|---|---|
| Cylinder | 0 to 679 | 680 to 1,559 | 1,560 to 2,409 | 2,410 to 3,139 | 3,140 to 3,469 | 3,470 to 4,119 | 4,120 to 4,659 | 4,660 to 4,939 |
| 1F(MFRPS) | 47.5 | 47.5 | 47.5 | 46.2 | 45.6 | 44.4 | 43.4 | 42.9 |
| 2F(MFRPS) | 379.8 | 379.8 | 379.8 | 369.8 | 365.0 | 355.4 | 347.1 | 343.4 |
| bpi | 223,117 | 232,875 | 243,216 | 246,277 | 247,500 | 250,096 | 252,254 | 253,443 |

| Zone | 9 | 10 | 11 | 12 | 13 | 14 |
|---|---|---|---|---|---|---|
| Cylinder | 4,940 to 5,989 | 5,990 to 6,919 | 6,920 to 7,499 | 7,500 to 7,979 | 7,980 to 9,149 | 9,150 to 9,865 |
| 1F(MFRPS) | 40.8 | 38.9 | 37.6 | 36.6 | 34.0 | 31.3 |
| 2F(MFRPS) | 326.1 | 310.8 | 301.1 | 292.8 | 271.9 | 250.3 |
| bpi | 257,665 | 261,664 | 264,174 | 266,320 | 271,500 | 275,000 |

MFRPS: Mega Flux Reversals Per Second

## 5.7 Servo Control

The servomechanism is controlled using a digital servo technique by the firmware in the digital signal processor (DSP).

DPS carries out VCM control. Control of the voice coil motor consists of track-following operation control and seek operation control. Track-following operation is controlled to center the data-head-mounted actuator over the target cylinder for read/write operation. The seek operation moves the actuator to a different target cylinder at high speed. For stable operation, a variety of calibration is done (see Section 5.5).

### 5.7.1 Servo control circuit

Figure 5.5 is the block diagram of the servo control circuit. The following explains each function of the servo control circuit.

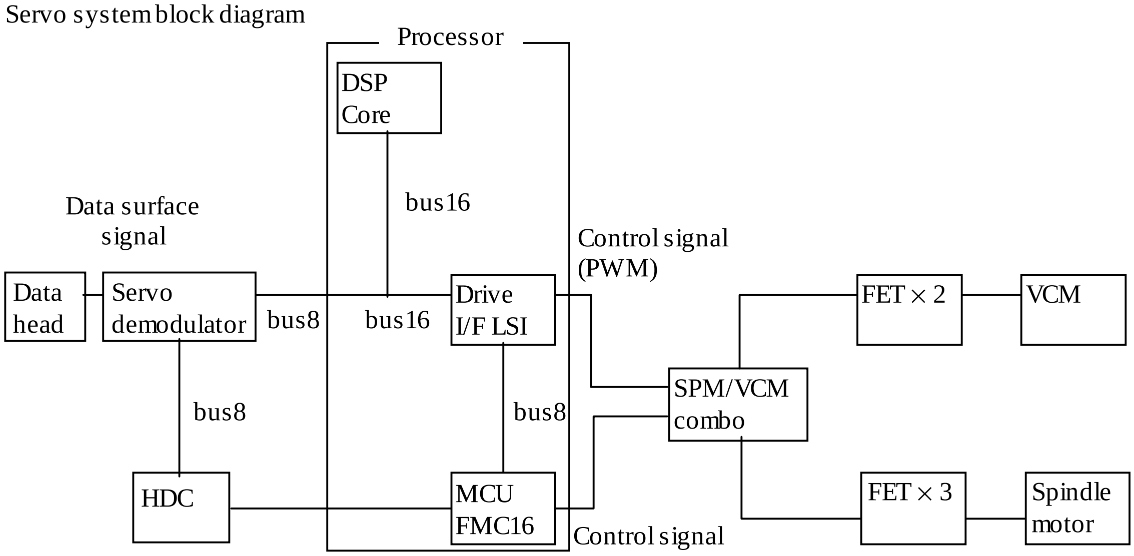


Notes: DSP controlled actuator servo system
MCU controlled spindle servo system

**Figure 5.5 Block diagram of servo control circuit**

(1) Processor-application specific IC (Processor-ASIC)

A DSP controls the spindle motor and the voice coil motor. The SCSI sends an instruction to the DSP through the SCSI control MCU and native interface. The DSP is a 1-chip Processor-ASIC, and also contains an analog-to-digital converter, a digital-to-analog converter, RAM, and other logic circuits.

(2) Servo demodulator

As explained in 5.7.2, servo signals consist of a training segment, a Servo Mark segment, a Position segment and a Gray Code segment, and there are 60 frames arranged around the circumference. In the servo demodulator, the Gray Code and Position signals from the servo signal are demodulated and used to control head positioning.

(3) SPM/VCM driver

The power amp drive signal output by the DSP (digital signal processor) is converted to a current for driving the VCM.

This consists of a controller which controls the sensor-less spindle motor by detecting the counter electro-motive voltage and a power MOSFET which drives the spindle motor.

### 5.7.2 Servo format

(1) Zone format

The voice coil motor is controlled to position a data head over a target cylinder, using the servo data that has already been recorded on the servo-specific surface and the data surface.

1) Dead space

The dead space is at the innermost position of a disk. At spindle start and stop, the head is in contact with this area of the disk.

2) Inner guard band (IGB)

IGB is located in an inner position of a disk. IGB is used to detect that actuator operation has exceeded the ordinary seek operation range.

3) Data zone

The servo zone is the data recording part on the data side. Ordinary head seek operations are done within this zone.

4) Outer guard band (OGB)

OGB is located in an outer position of a disk. Like IGB, OGB is also used to detect that actuator operation has exceeded the ordinary seek operation range.

(2) Frame format

The servo pattern consists of 60 servo frames per one revolution as shown in Figure 5.6 (viewed from track direction). One servo frame is divided into 4 areas and these areas are separated with a gap. Figure 5.7 shows the servo frame configuration.

1) W/R recovery area

The W/R recovery area consists of a fixed-period burst signal and has following functions.

- Preparation of servo mark detection
- Gap

2) Servo mark area

Servo mark patterns are written in the servo mark areas and patterns are detected by the length of the DC areas. The servo mark determines the starting point for detecting a position pattern and gray code pattern.

3) Gap area

The gap area is located before and after the gray code area and position area. The gap area prevents the misdetection of the gray code pattern or position pattern by releasing a synchronization of the servo mark or delaying a reference counter.

4) Gray code area

The gray code is an encoded area which includes the head number, servo sector number and cylinder information as gray code. Head position is recognized based on the cylinder information embedded as a gray code pattern.

5) Position area

Information for recognizing head position is recorded in the position area. Head position in cylinder unit is recognized by using the cylinder information in the gray code area, and head position under one cylinder (resolution) is recognized by using the information in the position area.

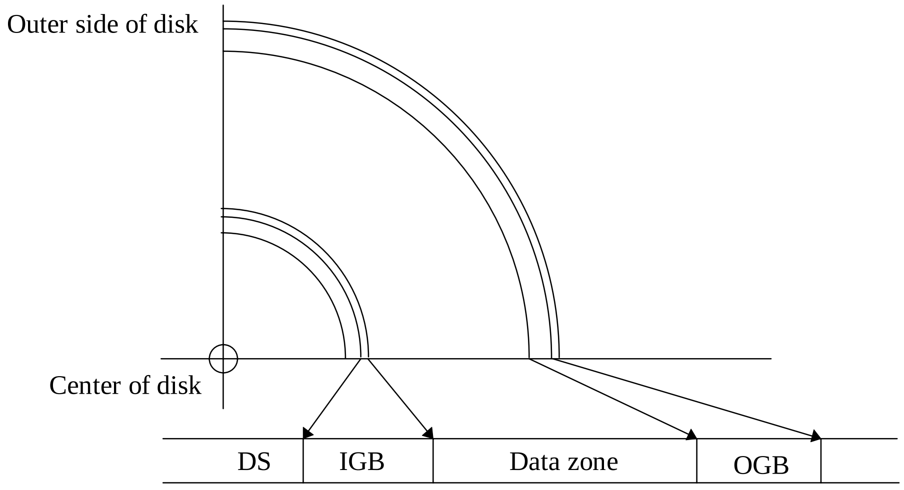


**Figure 5.6 Position of servo track**

### 5.7.3 Data-side servo data format

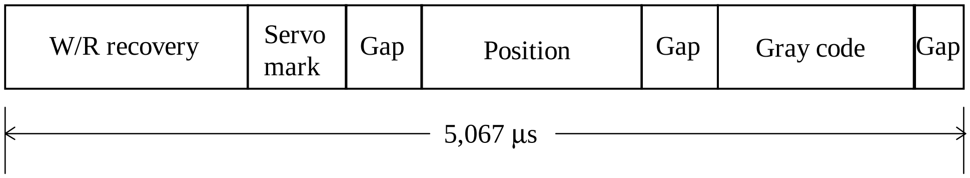


**Figure 5.7 Servo frame**

### 5.7.4 Spindle motor control

The FC control MCU controls the senseless 3-phase spindle motor. It carries out start / normal rotation control in accordance with commands from the FC unit.

(1) Activation

The FC control MCU carries out control of the spindle motor from the stopped condition to normal rotation by the following sequence.

1) DSP intermittently supplies current between specific phases (e.g., phases U and V) to force a fixed motor rotation position. This operation is called alignment.

2) In the next timing phase of 1) above, the DSP creates a rotating magnetic field. The motor rotates from a low rotational frequency up to about 100 rpm. This is called synchronization control.

3) When the motor reaches a high rotational frequency, a counterelectromotive voltage (back EMF) is generated. This voltage tells the DSP the rotational frequency and angular position of the motor. Using the rotation position detection data, the spindle controller supplies current to the correct phase to rotate the motor. The MCU then detects the rotational frequency, and the spindle controller accelerates the motor up to the steady-state angular frequency.

(2) Rotational speed control mode

When the activation mode terminates, the rotational speed control mode starts. The MPU controls the controller to maintain the detected rotational speed.

### 5.7.5 Voice coil motor control

The voice coil motor is controlled by moving the head-mounted carriage according to the servo data recorded on the specific data side. This control is done by firmware by digital servo control using the DSP. This control provides return-to-zero (RTZ) operation, seek operation, and track following operation.

(1) RTZ operation

When the power is turned on, or when a REZERO UNIT COMMAND is issued from the host computer, the DSP moves the head to the reference cylinder (cylinder 0) by an internal command from the MPU.

(2) Seek operation

When the host issues a data read/write request, the MPU issues a seek command to the DSP to move the head to a target cylinder. When the DSP receives this command, the DSP drives the voice coil motor, via the digital-to-analog converter and power amplifier, to move the head to the target cylinder. A predetermined target speed is used depending on the distance to move. The head is accelerated or decelerated to move to the target cylinder. Track following operation then begins.

(3) Track following operation

To read or write data from or to a disk, the head must be correctly centered over the target cylinder. The DSP receives a position signal from the servo head, converts it to a digital signal using an analog-to-digital converter, then decodes the signal. The digital servo control circuit controls the voice coil motor so that the position signal is constant. This centers the head over the target cylinder.

# GLOSSARY

**Actuator**

A head positioning assembly. The actuator consists of a voice coil motor, head arms, and a servo head which positions the read/write (R/W) head.

**Bus condition**

An asynchronous condition for changing the SCSI bus status. The bus condition is ATTENTION or RESET.

**Bus phase**

SCSI bus status. A SCSI bus is in the BUS FREE phase, ARBITRATION phase, SELECTION phase, RESELECTION phase, or INFORMATION TRANSFER phase. The INFORMATION TRANSFER phase is further classified into the DATA IN phase, DATA OUT phase, COMMAND phase, STATUS phase, MESSAGE IN phase, or MESSAGE OUT phase.

**Command (CDB)**

A request for an input/output operation of a target

**Command descriptor block (CDB)**

A series of data that consists of input/output operation commands. The CDB is transferred from an initiator to a target.

**Common command set (CCS)**

Standard SCSI logical specifications established by a work section meeting of the American National Standards Institute (ANSI). CCS specifies the functions that direct access devices (e.g., disk drives) must have.

**Disconnection**

Processing to temporarily cancel the connection of a target with a SCSI bus and an initiator. A target is disconnected when the SCSI bus is not needed during command processing in the target.

**Disk enclosure (DE)**

A device that contains rigid disks, an assembly motor mounted spindle, an actuator, heads, and air filters. The DE is sealed to protect the internal mechanism from external dust.

**Initiator (INIT)**

A SCSI device that initiates input/output operation on an SCSI bus

**Logical unit**

A unit in which an input/output operation on a SCSI bus can be performed

**Logical unit number (LUN)**

A unit number which identities a logical unit

**Mean time between failures (MTBF)**

MTBF is calculated as follows: total operation time/total number of errors in running disk drive where, the total operation time is the total power-on time.

**Mean time to repair (MTTR)**

Average time taken by a service engineer to diagnose and repair a faulty device

**Message**

Control information to be transferred between an initiator and a target operating on a SCSI bus. This information is used to control a series of bus phases and an execution sequence of input/output operations.

**Positioning time**

The sum of seek time and average rotational delay

**Ready LED**

A green light emitting diode mounted on the front of the disk drive. The ready LED can indicate the disk drive ready state or the disk drive selection state.

**Reconnection**

Relinkage of an initiator to a disconnected target when a target operation on a SCSI bus is needed

**Rotational delay**

Time for one rotation of a disk. Average rotational delay is the time for half a rotation of a disk. Average rotational delay is the average time from positioning a head on a track to reaching a sector.

**SCSI device**

A generic name for input/output devices, input/output controllers, host adapters, and other devices connected to a SCSI bus

**SCSI ID**

A physical device address which identifies a SCSI device on a SCSI bus. A SCSI ID is specific to each SCSI device. SCSI IDs #0 to #7 can be assigned. A SCSI ID must correspond to the bit number of a SCSI bus.

**Seek time**

Time required to move a head from the current track to a requested track. The seek time does not include the average rotational delay.

**Sense code**

A 1-byte code in sense data. A sense code identifies the type of error detected.

**Sense data**

Information generated by a target if an error is detected at command end. Sense data is used to post detailed information about the error.

**Sense key**

A 4-bit code in sense data. A sense key classifies the type of error detected.

**Small computer system interface (SCSI)**

An input-output interface standardized by the American National Standards Institute (ANSI) [Standard number: ANSI X3.131-1986]

**Status**

One-byte information posted from a target to an initiator when execution of each command ends. This information indicates the end of the command state.

**Target (TARG)**

A SCSI device that executes the input/output operation that was initiated by an initiator (INIT)

**Voice coil motor (VCM)**

A motor excited by one or more magnets. In the this disk drive, VCM is used to position the heads correctly at high speed.

# ABBREVIATION

**A**

| | |
|---|---|
| AC | Alternating Current |
| ADC | Analog-to-Digital Converter |
| AGC | Automatic Gain Control |
| ANSI | American National Standards Institute |
| AWG | American Wire Gauge |

**C**

| | |
|---|---|
| CDB | Command Descriptor Block |

**D**

| | |
|---|---|
| DAC | Digital-to-Analog Converter |
| DC | Direct Current |
| DE | Disk Enclosure |
| DS | Dead Space |
| DSP | Digital Signal Processor |

**E**

| | |
|---|---|
| ECC | Error Correction Code |

**F**

| | |
|---|---|
| FET | Field-Effect Transistor |
| FPC | Flexible Printed Circuit |

**G**

| | |
|---|---|
| GND | GrouND |

**I**

| | |
|---|---|
| I/F | Interface |
| IC | Integrated Circuit |
| ID | Identifier |
| IDD | Intelligent Disk Drive |
| IGB | Inner Guard Band |
| ILI | Incorrect Length Indicator |
| INIT | INITiator |

**L**

| | |
|---|---|
| LED | Light Emitting Diode |
| LPF | Low Path Filter |
| LSB | Least Significant Byte |
| LUN | Logical Unit Number |

**M**

| | |
|---|---|
| MPU | MicroProcessor Unit |
| MSB | Most Significant Byte |
| MTBF | Mean Time Between Failures |
| MTTR | Mean Time To Repair |

**N**

| | |
|---|---|
| NRZ | No-Return-to-Zero |

**O**

| | |
|---|---|
| OEM | Original Equipment Manufacturer |
| OGB | Outer Guard Band |

**P**

| | |
|---|---|
| P/N | Part Number |
| PCA | Printed Circuit Assembly |
| PER | Post ERror |
| PWM | Pulse Width Modulation |

**R**

| | |
|---|---|
| RAM | Random-Access Memory |
| RD | Raw Data |
| RLL | Run Length Limited |

**S**

| | |
|---|---|
| S/N | Serial Number |
| SCSI | Small Computer System Interface |
| SER/DES | Secondary Defect List |
| SG | Signal Ground |
| SKSV | Sense Key Specific Valid |
| SP | Save Page |

**T**

| | |
|---|---|
| TRM | TeRMinator |

**V**

| | |
|---|---|
| VCM | Verband Coil Motor |
| VFO | Variable Frequency Oscillator |

**W**

| | |
|---|---|
| WCLK | Write CLocK |
| WUS | Write UnSafe |

Comments concerning this manual can be directed to one of the following addresses:


FUJITSU LIMITED
Business Planning
Solid Square East Tower
580 Horikawa-cho,Saiwai-ku, Kawasaki,
210-0913, Japan
TEL: 81-44-540-4056
FAX: 81-44-540-4123

FUJITSU COMPUTER PRODUCTS OF AMERICA, INC.
2904 Orchard Parkway, San Jose,
California 95134-2009, U.S.A.
TEL: 1-408-432-6333
FAX: 1-408-432-3908

FUJITSU CANADA INC.
2800 Matheson Blvd. East, Mississauga, Toronto,
Ontario L4W 4X5, CANADA
TEL: 1-905-602-5454
FAX: 1-905-602-5457

FUJITSU EUROPE LIMITED
2, Longwalk Road, Stockley Park, Uxbridge,
Middlesex UB11 1AB, ENGLAND
TEL: 44-81-573-4444
FAX: 44-81-573-2643

FUJITSU DEUTSCHLAND GmbH
Frankfurter Ring 211, 80807 München, GERMANY
TEL: 49-89-323780
FAX: 49-89-32378100

FUJITSU NORDIC AB
Kung Hans Väg 12, S-192 68 Sollentura, SWEDEN
TEL: 46-8-626-6000
FAX: 46-8-626-6711

FUJITSU ITALIA S.p.A.
Via Nazario Sauro, 38 20099 Sesto S. Giovanni (MI), ITALY
TEL: 39-2-26294-1
FAX: 39-2-26294-201

FUJITSU FRANCE S.A.
I, Place des Etas-Unis, SILIC 310,
94588 Rungis Cedex, FRANCE
TEL: 33-1-41-80-38-80
FAX: 33-1-41-80-38-66

FUJITSU ICL ESPAÑA S.A.
Almagro 40, 28010 Madrid, SPAIN
TEL: 34-91-681-8100
FAX: 34-91-681-8125

FUJITSU AUSTRALIA LIMITED
2 Julius Avenue (Cnr Delhi Road) North Ryde N.S.W. 2113,
AUSTRALIA
TEL: 61-2-9776-4555
FAX: 61-2-9776-4556

FUJITSU HONG KONG LTD.
10/F., Lincoln House, 979 King's Road, Taikoo Place, Island East,
Hong Kong
TEL: 852-2827-5780
FAX: 852-2827-4724

FUJITSU KOREA LTD.
Coryo Finance Center Bldg, 23-6, YoulDo-Dong,
Young DungPo-Gu, Seoul, Republic of KOREA
TEL: 82-2-3787-6000
FAX: 82-2-3787-6070

FUJITSU COMPUTERS (SINGAPORE) PTE. LTD
20 Science Park Road #03-01,
TELETECH PARK SINGAPORE SCIENCE PARK II,
Singapore 117674
TEL: 65-777-6577
FAX: 65-771-5499

FUJITSU TAIWAN LTD.
8F, Hun Tai Center, 168-170, Tun Hwa North Road,
1st Sec., Taipei, TAIWAN
TEL: 886-2-545-7700
FAX: 886-2-717-4644

FUJITSU SYSTEMS BUSINESS (MALAYSIA) SDN. BHD.
Fujitsu Plaza, 1A, Jalan Tandang 204, P.O. Box 636 Pejabat Pos
Jalan Sultan
46770 Petaling Jaya, Selangor Darul Ehsan, Malaysia
TEL: 60-3-793-3888
FAX: 60-3-793-0888

FUJITSU SYSTEMS BUSINESS (THAILAND) LTD.
12th F1., Olympia Thai Tower, 444 Rachadapisek Road,
Samsennok, Huay Kwang, Bangkok 10320, Thailand
TEL: 66-2-512-6066
FAX: 66-2-512-6068

**FUJITSU LIMITED**

## Reader Comment Form

| We would appreciate your comments and suggestions for improving this publication. | | | |
|---|---|---|---|
| Publication No. | Rev. Letter | Title | Current Date |

How did you use this publication?

- ☐ Learning
- ☐ Installing
- ☐ Sales
- ☐ Reference
- ☐ Maintaining
- ☐ Operating

Is the material presented effectively?

- ☐ Fully covered
- ☐ Well Illustrated
- ☐ Well Organized
- ☐ Clean

What is your overall rating of this publication?

- ☐ Very Good
- ☐ Fair
- ☐ Very Poor
- ☐ Good
- ☐ Poor

What is your occupation?

Your other comments may be entered here. Please be specific and give page, paragraph and line number references where applicable.

Your Name & Return Address

Thank you for your interest. Please send this sheet to one of the addresses in a left page.

FUJITSU